A PLACE FOR A CHOCOLATE ICE CREAM

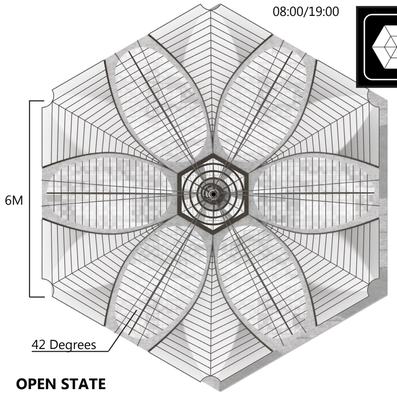

OPEN STATE

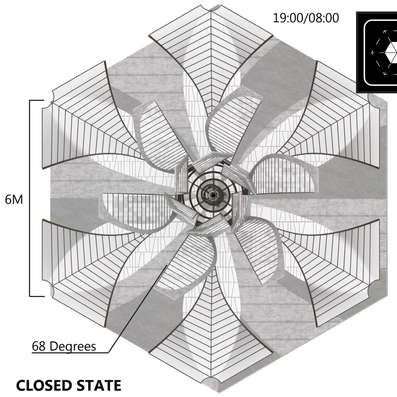

CLOSED STATE

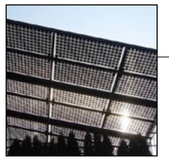

SUNPOWER X-SERIES SOLAR PANELS

MPPT CONTROLLER

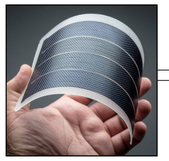

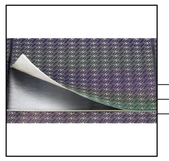

MEMBRANE

FOLDING ARMS

ROTATION POINT

HEXAGONAL ESTRUCTURE

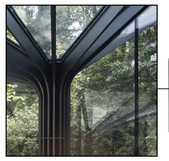

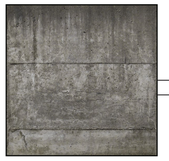

HYDRAULIC SYSTEM

FOUNDATIONS

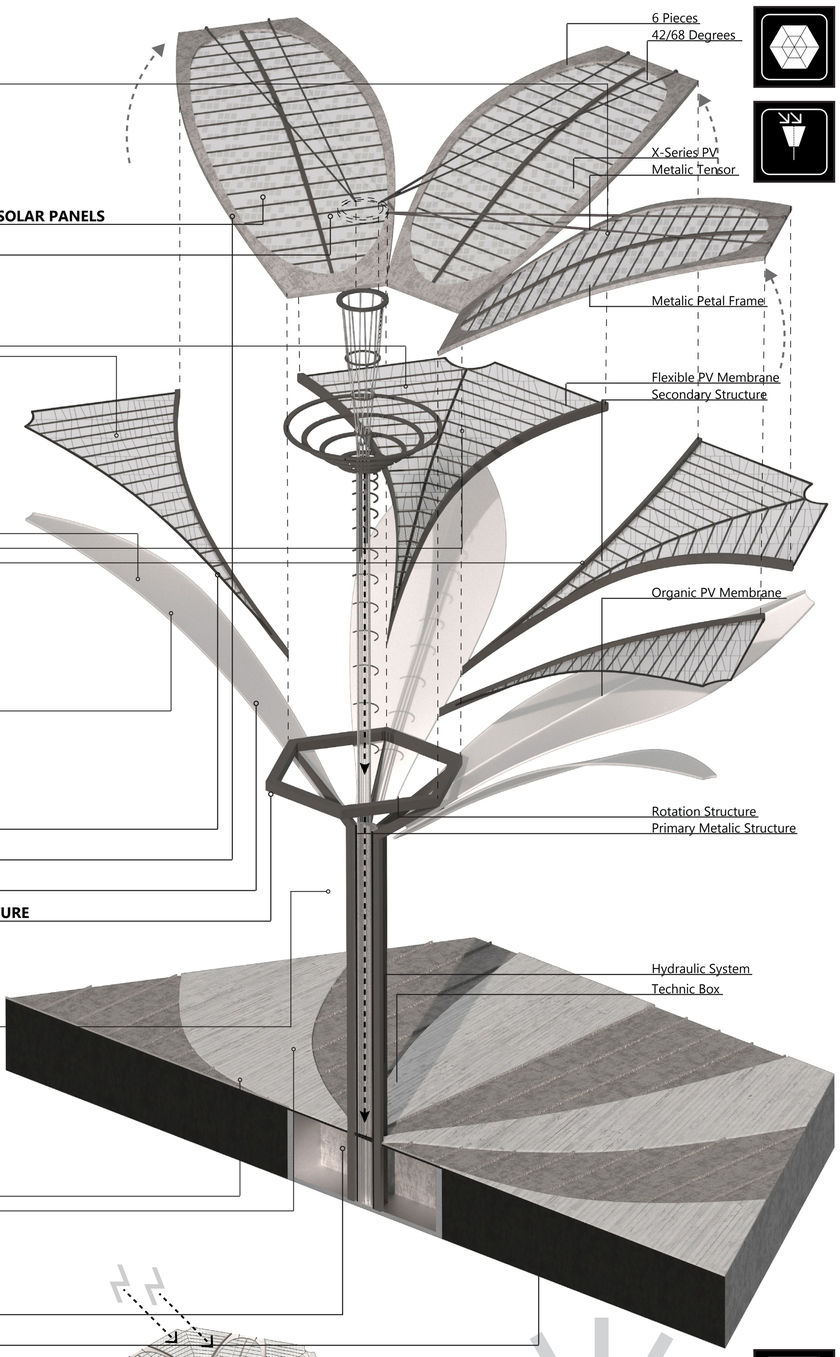

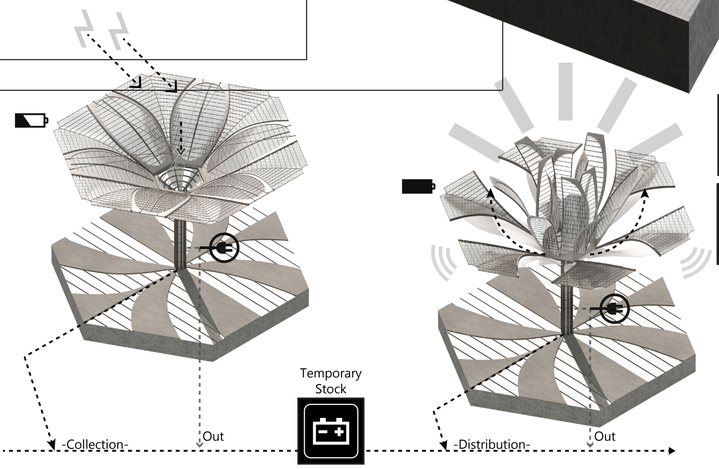

S1M19052-LAGI